Stud Welding Products, Inc.

your number one stud

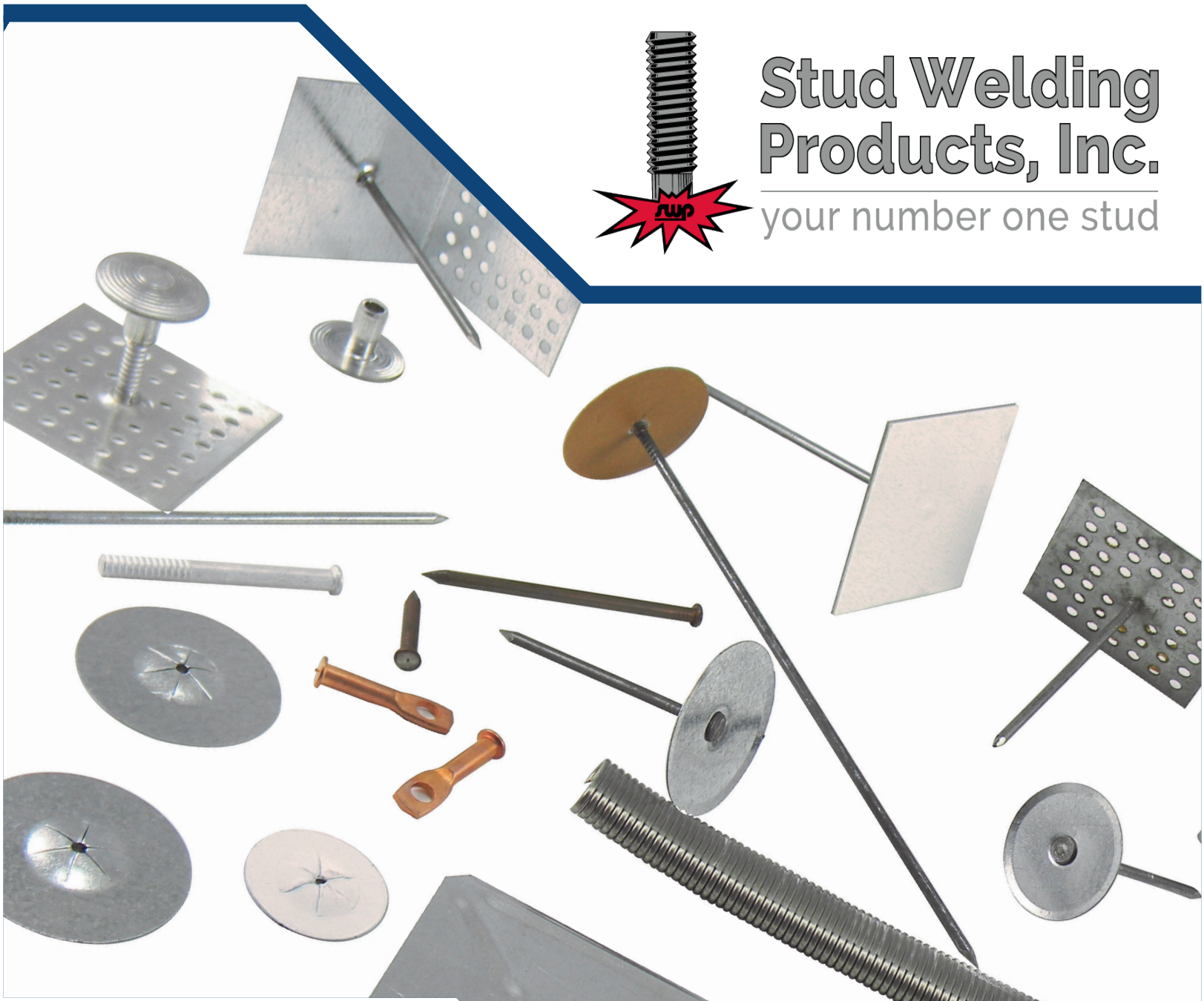

INSULATION CATALOG

REVISION DATE: 03/2021

Table Of Contents

PRODUCT	PAGE
Who we are	1
Weld Pin Comparison	2
CD weld Pin	3
Powerbase® Weld Pin	4
Double Pointed Weld Pin	5
Drop Through Nail	6
J Hooks	7
Cupped Head Weld Pins	8
FSK Vapor Seal Disk	9
ASJ Vapor Seal Disk	10
Dyanpoint® Resistance Cupped Weld Pin	11
Self Locking Washers	12
Dome Caps	13
Self Stick Hangers 2 pgs	14 - 15
Perforated Insulation Hanger	16
90˚ Insulation Hanger	17
Clutch Clip	18
Pronged Insulation Hanger	19
Annular Navy Hanger	20
Z-Clip	21
HA19-Z Adhesive 2 pgs	22 - 23
Tactoo® GPA-72 Adhesive 2 pgs Lacing	24 - 25
Anchor Apllication	26
Lacing Anchors	27
Lacing Anchor Parts	28
Quilting Pins	29
Annular Ring Navy Stud	30
Mushroom Cap	31
Hog Ring	32
Pneumatic Hog Ring Tool	33
CD Pin Welder Comparison	34
StudPro LiteXi Spec Sheet	35
StudPro 2500Xip Spec Sheet	35
Pegasar 500 ISO Spec Sheet	37
Gun Accessories	38 - 40

Your #1 Insulation Source

Who We Are

Stud Welding Products, Inc is your most complete source for insulation fasteners. In business since 1981 with over 100 years combined employee experience with insulation fasteners. Stud Welding Products has field and sales representatives available for technical assistance with your insulation fastening requirements.

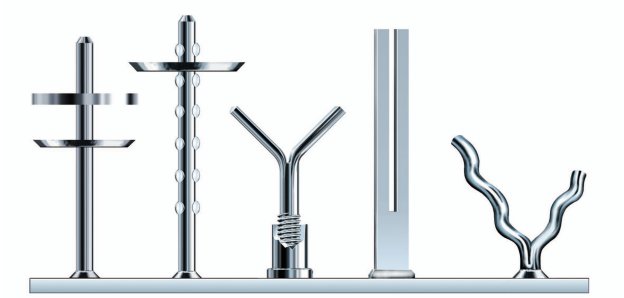

What We Do

In addition to our technical assistance, we offer one of the most complete fastening product lines in the industry, stocking quality products from leading manufactures in the USA.

Stud Welding Products takes pride in it's advanced and rapid repair program. We have the capabilities of repairing all makes and models of pin welders to assure you minimal cost and down time.

INSULATION WELD PINS

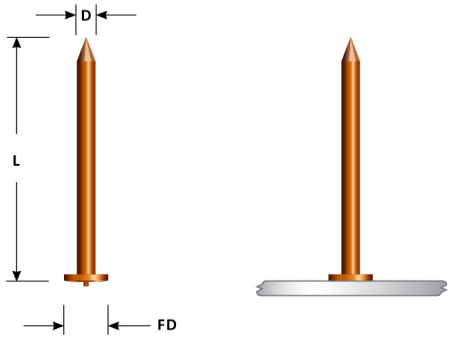

Capacitor Discharge Weld Pin

The standard weld pin used for most applications.

CD weld pins are used for attaching insulation to various metals, with the use of a CD welder. After the pin is welded in place, the insulation is impaled on the pin and secured with a self-locking washer (sold separately).

Available in regular point (as pictured) and blunt-end.

Standrad Dia: 10ga & 12ga-lengths as required

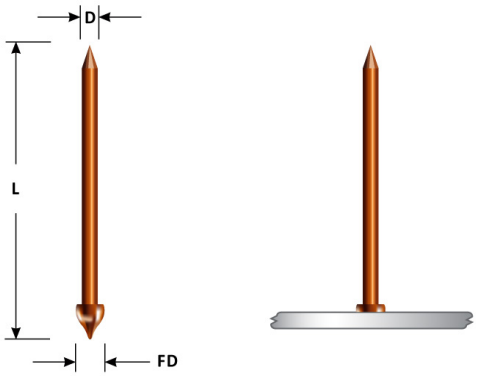

Powerbase® Weld Pin

Not recommended to use on metals less than 1/16" thick

A specialty type of CD pin, Powerbase pins can be welded through mill scale, rusted or painted surfaces. No need to grind or clean the base material. After the pin is welded to the surface, a self-locking washer is used to secure the insulation. CD welder with cup head capacity or larger is required.

Standard Dia: 10ga & limited 12ga

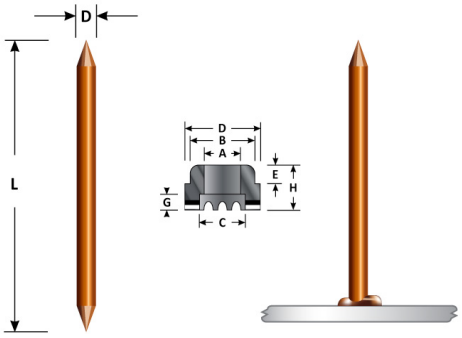

Double Pointed Weld pin

The standard weld pin if using arc stud welding equipment.

Double pointed pins are normally welded with an arc or drawn arc stud welding machine. Like other weld pins, insulation is impaled over the welded pin and secured with a self-locking washer. When welding, the pins can be welded to rough or contaminated surfaces, without preparation. Ferrules are a component of the pins and automatically come when ordering double pointed pins.

Standard Dia: 10ga

Visit our website at www.StudWeldProd.com or email Info@StudWeldProd.com

Downey, CA
9459 Washburn Rd
Downey CA 90242
Ph: 800-252-1919
Fax: 562-862-3022

Hayward, CA
2391 American Ave
Hayward, CA 94545
Ph: 510-782-7883
Fax: 510-782-7918

Kent, WA
7820 S. 210th St #C103
Kent, WA 8032
Ph: 425-656-9787
Fax: 425-656-9786

Phoenix, AZ
3535 E Wier Ave #4
Phoenix, AZ 85040
Ph: 602-305-9350
Fax: 602-305-4890

CAPACITOR DISCHARGE (CD) WELD PINS

REGULAR POINT

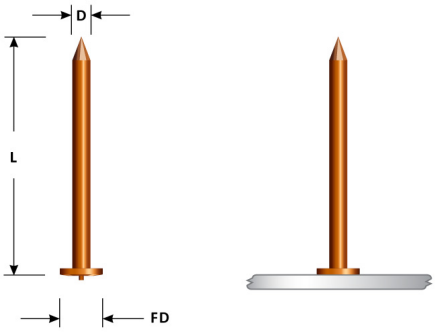

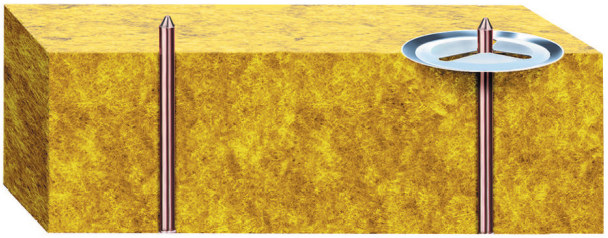

BLUNT END

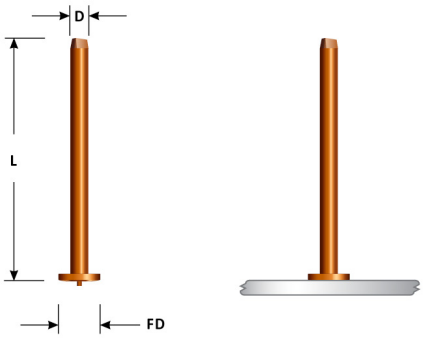

DESCRIPTION

Weld pins are used for attaching insulation to various metals, with the use of a CD welder. After the pin is welded in place, the insulation is impaled on the pin and secured with a self-locking washer. Nail point is standard, blunt end is available as special order item.

SPECIFICATIONS

DIAMETER (D)	FLANGE DIAMETER STEEL (FD)	FLANGE DIAMETER ALUMINUM (FD)	LENGTH (L)
12 ga (.106)	.180	.235	as required
10 ga (.135)	.218	.255	as required
MATERIAL	Mild Steel with copper coating Stainless Steel 302HQ Aluminum 1100-H14		
APPLICATION	Length of this style pin should exceed the thickness of the insulation, in order to securely attach the selflocking washer.		

Reccomended Products:

StudPro 2500XiP

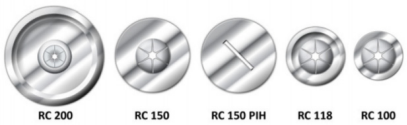

Round Washers

Square Washers

POWERBASE ®WELD PINS

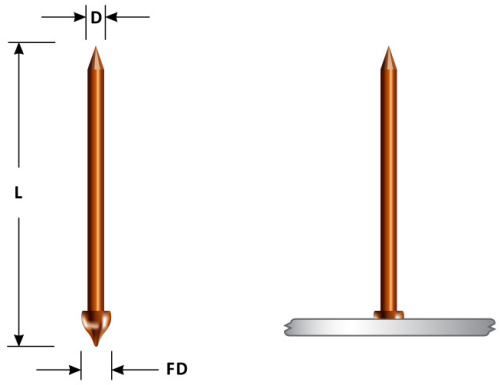

DESCRIPTION

A specialty type of Capacitor Discharge (CD) pin, the Powerbase® pin can be welded through mill scale, rusted or painted surfaces, without having to grind/clean the base metal. After the pin is welded to the surface, a self-locking washer is installed to secure the insulation.

SPECIFICATIONS

DIAMETER (D)	FLANGE DIAMETER (FD)
12 ga (.106)	.165
10 ga (.135)	.188
MATERIAL	Mild Steel with copper coating Stainless Steel 302HQ, 310 and 316 as special order
APPLICATION	We do not reccomend the use of powerbase® pins on metals less than 1/16” thick. CD welder must have cuphead mode or larger than 1/4” capacity.

Downey, CA
9459 Washburn Rd
Downey CA 90242
Ph: 800-252-1919
Fax: 562-862-3022

Hayward, CA
2391 American Ave
Hayward, CA 94545
Ph: 510-782-7883
Fax: 510-782-7918

Kent, WA
7820 S. 210th St #C103
Kent, WA 8032
Ph: 425-656-9787
Fax: 425-656-9786

Phoenix, AZ
3535 E Wier Ave #4
Phoenix, AZ 85040
Ph: 602-305-9350
Fax: 602-305-4890

DOUBLE POINTED WELD PIN

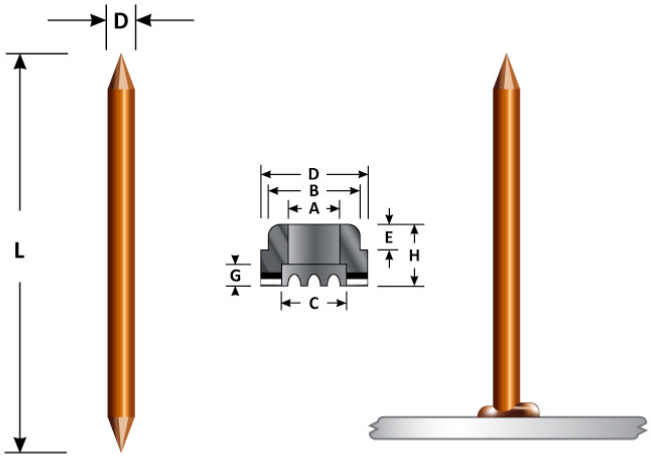

ferrules provided for arc welding applications

DESCRIPTION

Double Pointed pins are normally welded with an Arc or Drawn Arc Stud Welding machine. It will also come with a ceramic ferrule, a component of the pin for arc welding. Like other weld pins, insulation is impaled over the welded pin and secured with a Self-Locking Washer. When arc welding, the pins can be welded to rough or contaminated surfaces, without preparation. Double Pointed pins can be welded with the AGM Model PA-15 CD Welder, but only to clean surfaces. Metal must be at least 1/16” thick to CD weld.

Downey, CA
9459 Washburn Rd
Downey CA 90242
Ph: 800-252-1919
Fax: 562-862-3022

Hayward, CA
2391 American Ave
Hayward, CA 94545
Ph: 510-782-7883
Fax: 510-782-7918

Kent, WA
7820 S. 210th St #C103
Kent, WA 8032
Ph: 425-656-9787
Fax: 425-656-9786

Phoenix, AZ
3535 E Wier Ave #4
Phoenix, AZ 85040
Ph: 602-305-9350
Fax: 602-305-4890

DROP THROUGH NAILS

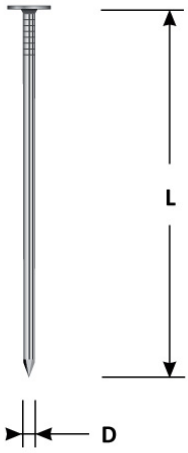

DESCRIPTION

Drop Through Nails are used on metal deck to attach insulation to the ceiling. The pin is inserted through the deck, concrete is poured and once dry will hold the pin so the insulation can be attached.

SPECIFICATIONS

HEAD DIA.	SPINDLE DIA	STANDARD LENGTHS
5/16”	12 GA	UP TO 12”

Other lengths available upon request
Material: mild steel

Downey, CA
9459 Washburn Rd
Downey CA 90242
Ph: 800-252-1919
Fax: 562-862-3022

Hayward, CA
2391 American Ave
Hayward, CA 94545
Ph: 510-782-7883
Fax: 510-782-7918

Kent, WA
7820 S. 210th St #C103
Kent, WA 8032
Ph: 425-656-9787
Fax: 425-656-9786

Phoenix, AZ
3535 E Wier Ave #4
Phoenix, AZ 85040
Ph: 602-305-9350
Fax: 602-305-4890

J HOOKS

NAIL POINT

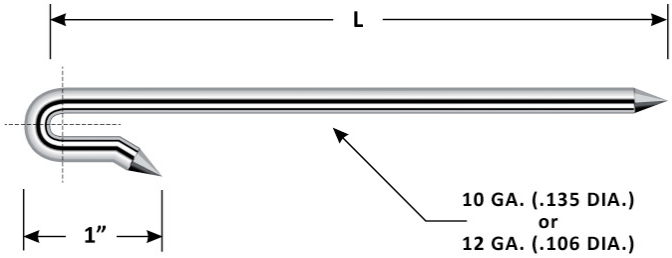

BLUNT END

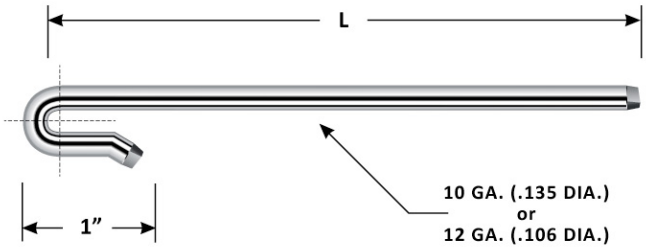

DESCRIPTION

J Hooks are used to secure insulation to wire mesh. They can be tack and arc welded, or just hooked onto the mesh. After the hook is attached, the insulation is installed over the longer portion and held with a self-locking washer.

SPECIFICATIONS	J HOOKS
DIAMETER	10 ga (.135 dia) standard 12 ga (.106 dia) ***special order item-not stocked*** Not made in 14 ga.
MATERIAL	Available in mild steel (galvanized) or stainless steel type 302HQ
APPLICATION	Available with nail point or blunt end Used with self locking washers

Downey, CA
9459 Washburn Rd
Downey CA 90242
Ph: 800-252-1919
Fax: 562-862-3022

Hayward, CA
2391 American Ave
Hayward, CA 94545
Ph: 510-782-7883
Fax: 510-782-7918

Kent, WA
7820 S. 210th St #C103
Kent, WA 8032
Ph: 425-656-9787
Fax: 425-656-9786

Phoenix, AZ
3535 E Wier Ave #4
Phoenix, AZ 85040
Ph: 602-305-9350
Fax: 602-305-4890

CUPPED HEAD WELD PINS

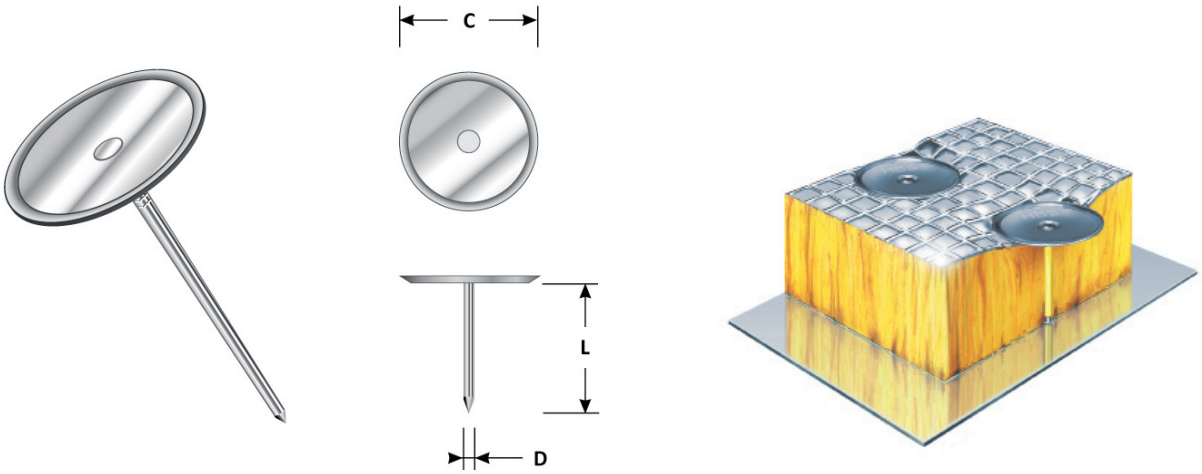

DESCRIPTION

The Cup Head; Cupped head (CH) or Mini-Cup (MC) Weld Pin is a mild steel fabricated part made up of a weld pin and a stacked on speed clip, or retaining washer. This product is genearlly applied with a capacitor discharge (CD) welder. The normal/standard material is galvanized steel (both head and plate). Pins are also available "insulated" for welding through foil-faced materials to prevent arcing on the foil facia.

PART NO	DIAMETER (D)	HEAD DIAMETER(C)	LENGTH (L)
CH-12	.106	1-1/2"	as required
CH-10* ***non-standard***	.135	1-1/2"	as required
MC-14* ***non-standard***	.080	1-3/16"	up to 2-1/8"
MC-12	.106	1-3/16"	as required
MATERIAL	Galvanized steel, stainless steel available as special order		
APPLICATION	Cup head pins are designed to weld through and secure blanket insulaion to metal heating and air conditionain ducts, ovens, tanks, and boilers. The insulation may be fiberglass, mineral wool, or other low density insulaiton. The pins are welded through the insulation for a one step application.		

Downey, CA
9459 Washburn Rd
Downey CA 90242
Ph: 800-252-1919
Fax: 562-862-3022

Hayward, CA
2391 American Ave
Hayward, CA 94545
Ph: 510-782-7883
Fax: 510-782-7918

Renton, WA
927 Thomas Ave SW
Renton, WA 98057
Ph: 425-656-9787
Fax: 425-656-9786

Phoenix, AZ
3535 E Wier Ave #4
Phoenix, AZ 85040
Ph: 602-305-9350
Fax: 602-305-4890

FSK VAPOR SEAL DISC

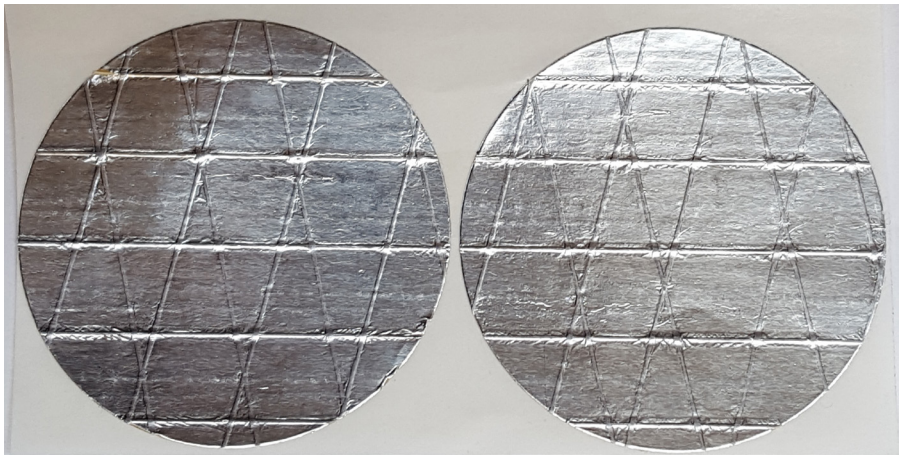

DESCRIPTION

FSK self-adhering vapor seal disc used to cover mechanical fasteners such as washers, cupped head or mini cup weld pins. Will also seal small punctures and tears. Precut discs on a paper liner. UL listed material and diagonally reinforced (foil/scrim/kraft lamination). With special cold weather adhesive system.

Disks: 2-½ inch (6.4 cm) diameter
Thickness: 6.5 mils (exclusive of liner)
Quantity: 500 disks/squares on 3 inch (7.6) core

Downey, CA
9459 Washburn Rd
Downey CA 90242
Ph: 800-252-1919
Fax: 562-862-3022

Hayward, CA
2391 American Ave
Hayward, CA 94545
Ph: 510-782-7883
Fax: 510-782-7918

Kent, WA
7820 S. 210th St #C103
Kent, WA 8032
Ph: 425-656-9787
Fax: 425-656-9786

Phoenix, AZ
3535 E Wier Ave #4
Phoenix, AZ 85040
Ph: 602-305-9350
Fax: 602-305-4890

ASJ VAPOR SEAL DISCS

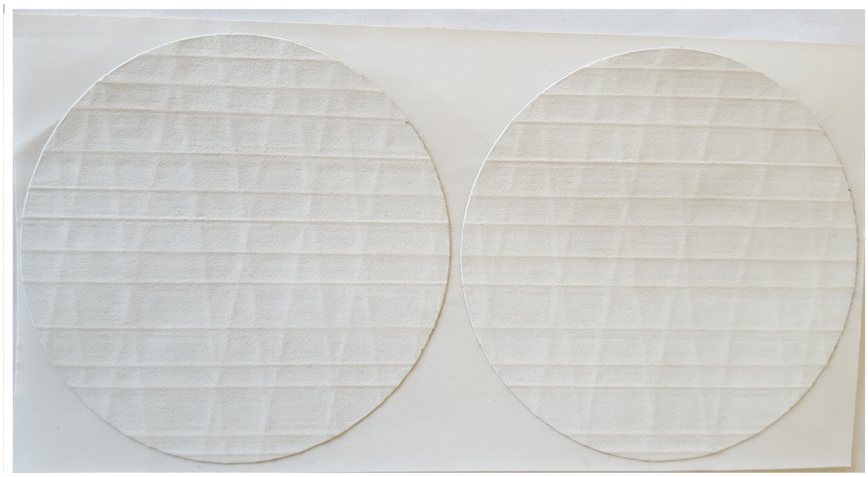

DESCRIPTION

ASJ self-adhering vapor seal disc used to cover mechanical fasteners such as washers, cupped head or mini cup weld pins. Will also seal small punctures and tears. Precut discs on a paper liner. UL listed material and diagonally reinforced (white foil/scrim/kraft lamination). With special cold weather adhesive system.

Disks: 2-½ inch (6.4 cm) diameter
Thickness: 11.5 mils (exclusive of liner)
Quantity: 500 disks/squares on 3 inch (7.6) core

Downey, CA
9459 Washburn Rd
Downey CA 90242
Ph: 800-252-1919
Fax: 562-862-3022

Hayward, CA
2391 American Ave
Hayward, CA 94545
Ph: 510-782-7883
Fax: 510-782-7918

Kent, WA
7820 S. 210th St #C103
Kent, WA 8032
Ph: 425-656-9787
Fax: 425-656-9786

Phoenix, AZ
3535 E Wier Ave #4
Phoenix, AZ 85040
Ph: 602-305-9350
Fax: 602-305-4890

DYNAPOINT® RESISTANCE TYPE CUPPED WELD PINS

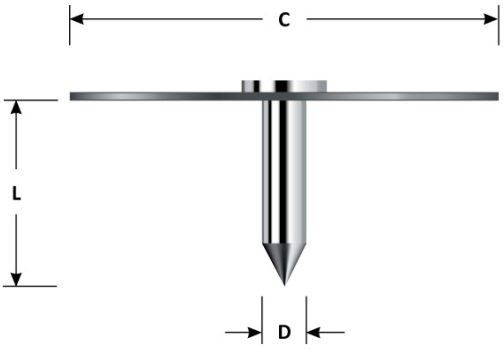

SPECIFICATIONS		
D	**C**	**L**
.135	1”	1/2” min
MATERIAL	Spindle is mild steel Washer is Mild Steel	
PLATING	Zinc/galvanized	
longer lengths available upon request		

PART NO	PACK	WGT/M	RECOMMENDED USE
RP-9-0500-1	1M	6.5	For 1/2” Duct Liner
RP-9-0500-5	5M	6.5	For 1/2” Duct Liner
RP-9-0750-1	1M	7.6	For 1” Duct Liner
RP-9-0750-2	5M	7.6	For 1” Duct Liner
RP-9-1000-1	1M	8.6	For 1” High Density Duct Liner
RP-9-1000-5	5M	8.6	For 1” High Density Duct Liner

Downey, CA
9459 Washburn Rd
Downey CA 90242
Ph: 800-252-1919
Fax: 562-862-3022

Hayward, CA
2391 American Ave
Hayward, CA 94545
Ph: 510-782-7883
Fax: 510-782-7918

Kent, WA
7820 S. 210th St #C103
Kent, WA 8032
Ph: 425-656-9787
Fax: 425-656-9786

Phoenix, AZ
3535 E Wier Ave #4
Phoenix, AZ 85040
Ph: 602-305-9350
Fax: 602-305-4890

SELF LOCKING WASHERS

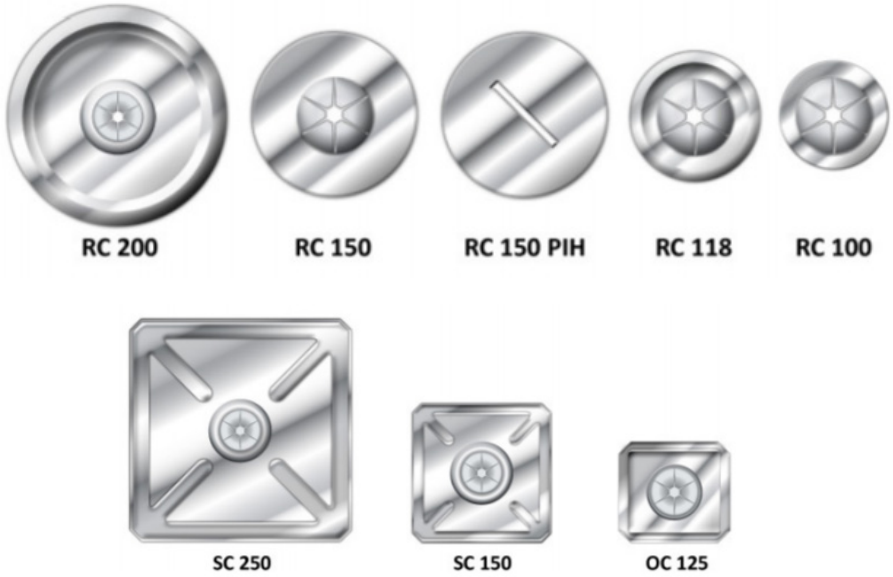

DESCRIPTION

Self-locking washers are designed to be used with weld pins, insulation hangers, and lacing anchors with standard 10ga,12ga, or 14ga hole size. Other special hole sizes are available upon request.

SPECIFICATIONS

STYLE	RC 100	RC 118	RC 150	RC 150 PIH	RC 200	OC 125	SC 150	SC 250
SIZE/DIAM	1”	1-3/16”	1-1/2”	1-1/2”	2”	1-1/8” x 1-1/4”	1-1/2” x 1-1/2”	2-1/2” x 2-1/2”
THICKNESS	.015	.015	.015	.015	.015	.015	.015	.015
PACK	1000	1000	1000	1000	2000	1000	3000	1000
APPROX WGT lbs/1000	4.2	4.8	8	8	19	6.7	10.3	31

Material: galvanized steel (standard), stainless steel and aluminum available

Visit our website at www.StudWeldProd.com or email Info@StudWeldProd.com

Downey, CA
9459 Washburn Rd
Downey CA 90242
Ph: 800-252-1919
Fax: 562-862-3022

Hayward, CA
2391 American Ave
Hayward, CA 94545
Ph: 510-782-7883
Fax: 510-782-7918

Kent, WA
7820 S. 210th St #C103
Kent, WA 8032
Ph: 425-656-9787
Fax: 425-656-9786

Phoenix, AZ
3535 E Wier Ave #4
Phoenix, AZ 85040
Ph: 602-305-9350
Fax: 602-305-4890

DOME CAPS

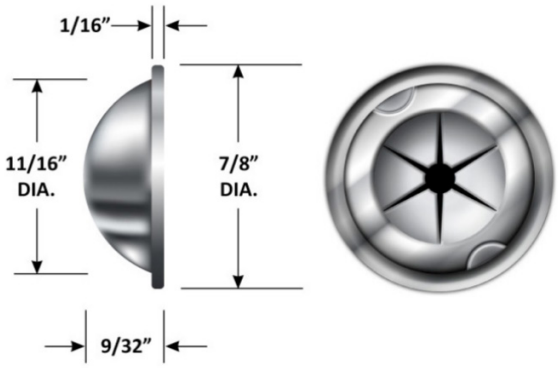

DESCRIPTION

Dome caps are designed to be used where appearance and safety are factors when installing insulation, or fabricating blankets or pads. The caps are used to cover the nail point on weld pins, hangers, lacing anchors & quilt pins. For best results, pins should be 1/4" longer than the insulation thickness. Secure insulation with a self-locking washer, then install the dome cap to cover the nail point

SPECIFICATIONS

PART NO	DOME FINISH	WEIGHT/M
ADC-**	Plain Aluminum	4
BDC-**	Black Aluminum	4
SDC-**	Stainless Steel	6
WDC-**	White Aluminum	4

** Specify gauge when ordering
Material: all caps have a stainless steel insert

Downey, CA
9459 Washburn Rd
Downey CA 90242
Ph: 800-252-1919
Fax: 562-862-3022

Hayward, CA
2391 American Ave
Hayward, CA 94545
Ph: 510-782-7883
Fax: 510-782-7918

Kent, WA
7820 S. 210th St #C103
Kent, WA 8032
Ph: 425-656-9787
Fax: 425-656-9786

Phoenix, AZ
3535 E Wier Ave #4
Phoenix, AZ 85040
Ph: 602-305-9350
Fax: 602-305-4890

SELF STICK HANGERS

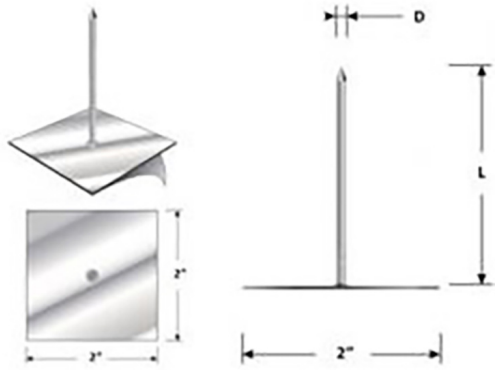

DESCRIPTION

Self-Adhering Hangers are designed to attach insulation to clean, dry, smooth, non-porous surfaces. After the hanger is installed, the insulation is impaled over the spindle & secured with a selflocking washer. Due to the nature of adhesives, it is important that the user read & follow the guidelines. It is the responsibility of the user to determine the suitability of the intended application.

Important Guidelines On Next Page

SPECIFICATIONS

DIAMETER (D)	P	LENGTH (L)
12 ga (.106)	2" square w/tape	1"
12 ga (.106)	2" square w/tape	1-5/8"
12 ga (.106)	2" square w/tape	2"
12 ga (.106)	2" square w/tape	2-1/2"
12 ga (.106)	2" square w/tape	3-1/2'
12 ga (.106)	2" square w/tape	4-1/2"
12 ga (.106)	2" square w/tape	5-1/2'
12 ga (.106)	2" square w/tape	6-1/2'
Galvanized steel (standard)		

Downey, CA
9459 Washburn Rd
Downey CA 90242
Ph: 800-252-1919
Fax: 562-862-3022

Hayward, CA
2391 American Ave
Hayward, CA 94545
Ph: 510-782-7883
Fax: 510-782-7918

Kent, WA
7820 S. 210th St #C103
Kent, WA 8032
Ph: 425-656-9787
Fax: 425-656-9786

Phoenix, AZ
3535 E Wier Ave #4
Phoenix, AZ 85040
Ph: 602-305-9350
Fax: 602-305-4890

SELF STICK HANGERS IMPORTANT NOTICE

Important Notice to Purchaser and Any User

WARRANTY DISCLAIMER AND LIMITATIONS

ALL STATEMENTS, RECOMMENDATIONS AND TECHNICAL INFORMATION CONTAINED HEREIN ARE BASED ON TESTS WE BELIEVE TO BE RELIABLE, BUT THE ACCURACY OR COMPLETENESS THEREOF IS NOT GUARANTEED. THE PURCHASER AND USER AGREE THAT THERE ARE NO WARRANTIES, EXPRESSED OR IMPLIED, OF MERCHANTABILITY, FITNESS FOR ANY PARTICULAR PURPOSE OR OTHERWISE AND, IN ANY EVENT, THE MANUFACTURER'S AND SELLER'S ONLY OBLIGATION SHALL BE TO REPLACE ONLY THAT PORTION OF THE SHIPMENT PROVED TO BE DEFECTIVE. NEITHER THE MANUFACTURER NOR THE SELLER SHALL BE LIABLE FOR ANY INJURY, LOSS OR DAMAGE, DIRECT OR CONSEQUENTIAL, ARISING OUT OF THE APPLICATION, USE OR INABILITY TO USE THIS PRODUCT, WHETHER DUE IN WHOLE OR IN PART TO MANUFACTURER'S NEGLIGENCE, DEFECTIVE MATERIAL OR WORKMANSHIP, DESIGN, OR WHETHER DUE TO ANY OTHER CAUSE. BEFORE ATTEMPTING TO USE THE PRODUCT, THE USER SHOULD DETERMINE ITS SUITABILITY FOR INTENDED APPLICATION AND PURPOSE. THIS DISCLAIMER OF LIABILITY AND LIMITATION OF LIABILITY MAY NOT BE ALTERED EXCEPT BY AGREEMENT SIGNED BY THE OFFICERS OF THE MANUFACTURER AND SELLER.

GUIDELINES FOR SELF-ADHERING HANGERS

USE: These hangers are designed to mechanically hold insulation material to various surfaces. It is very important for the user to determine the suitability of this product for each application. Discretion must be used in application, and we recommend that the user first perform a test application to satisfy himself of the desirability of using the product for the user's particular purpose.

CAUTION: The user is responsible for determining the suitability of the application. Hangers must be applied to a clean, dry, non-porous surface that is free of all oil, films, dust, rust, etc. Self-adhering hangers are not recommended for concrete or painted surfaces. It is important that they not be used where operating temperatures can exceed 150° Fat the point of adhesion. Hangers should not be used on ceilings or roofs of metal buildings or any surface the reverse side of which may be exposed to heat concentration from sunlight, etc., direct or otherwise. Load per anchor should not exceed 3 lbs.

APPLICATION: Best results are obtained when ambient temperature is above 40° Fat the time of application. Remove the release paper from the base plate and apply hanger to a suitable flat surface. A firm straight, forward pressure should be used. Do not twist. Due to the quick-tack nature of the adhesive, it is very important that the release paper not be removed until ready to apply the hanger. Insulation may be applied immediately after properly securing the hanger. Hangers should be stored at 75° F and 50% relative humidity. It is important that stock be rotated. Shelf life is estimated at 2 years if stored as recommended.

Stud Welding Products, Inc.
your number one stud

PERFORATED INSULATION HANGERS

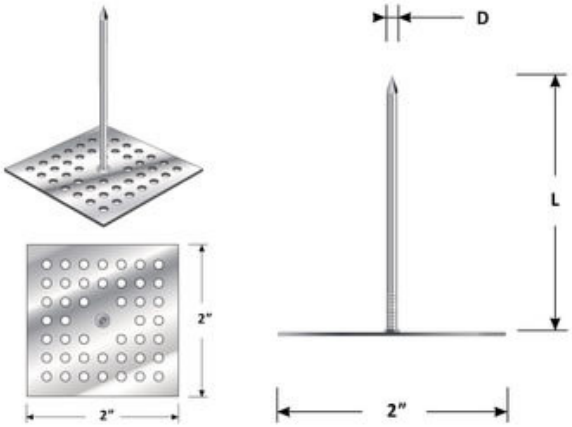

DESCRIPTION

Perforated Insul-Hangers are used to attach insulation with the use of general purpose adhesive. Surfaces must be clean and dry before adhesive is applied. Some protective coatings are not compatible with adhesives and it is recommended that the user make test bonds before proceeding with the application. After the hanger is installed, insulation is impaled over the spindle and secured with a self-locking washer

DIAMETER (D)	PLATE	LENGTH (L)
12 GA (.106)	2” square / nominal thickness .015”	1”
12 GA (.106)	2” square / nominal thickness .015”	1-5/8”
12 GA (.106)	2” square / nominal thickness .015”	2”
12 GA (.106)	2” square / nominal thickness .015”	2-1/2”
12 GA (.106)	2” square / nominal thickness .015”	3-1/2”
12 GA (.106)	2” square / nominal thickness .015”	4-1/2”
12 GA (.106)	2” square / nominal thickness .015”	5-1/2”
12 GA (.106)	2” square / nominal thickness .015”	6-1/2”
12 GA (.106)	2” square / nominal thickness .015”	8”
12 GA (.106)	2” square / nominal thickness .015”	8-1/2”
12 GA (.106)	2” square / nominal thickness .015”	9-1/2’
12 GA (.106)	2” square / nominal thickness .015”	10-1/2”
Standard length listed above, other lengths available as special order		
Standard material is galvanized steel for pin and plate. Available in stainless steel and aluminum as special order		

90° INSULATION ANGEL HANGER

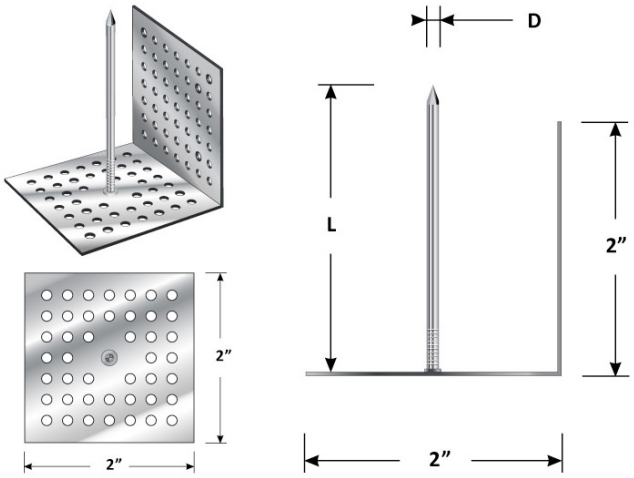

DESCRIPTION

This type of perforated hanger is used for applications that require a 90° angle for installing insulation. The insulation is impaled over the nail and secured with a self-locking washer. The hanger can be secured with adhesive or mechanically.

DIAMETER (D)	LENGTH (L)	PACKING
12 GA (.106)	2-1/2’	500
12 GA (.106)	3-1/2’	500
12 GA (.106)	4-1/2’	500
12 GA (.106)	5-1/2’	500
12 GA (.106)	6-1/2’	500
Mild steel with galvanized finish		

Downey, CA
9459 Washburn Rd
Downey CA 90242
Ph: 800-252-1919
Fax: 562-862-3022

Hayward, CA
2391 American Ave
Hayward, CA 94545
Ph: 510-782-7883
Fax: 510-782-7918

Renton, WA
927 Thomas Ave SW
Renton, WA 98057
Ph: 425-656-9787
Fax: 425-656-9786

Phoenix, AZ
3535 E Wier Ave #4
Phoenix, AZ 85040
Ph: 602-305-9350
Fax: 602-305-4890

CLUTCH CLIPS

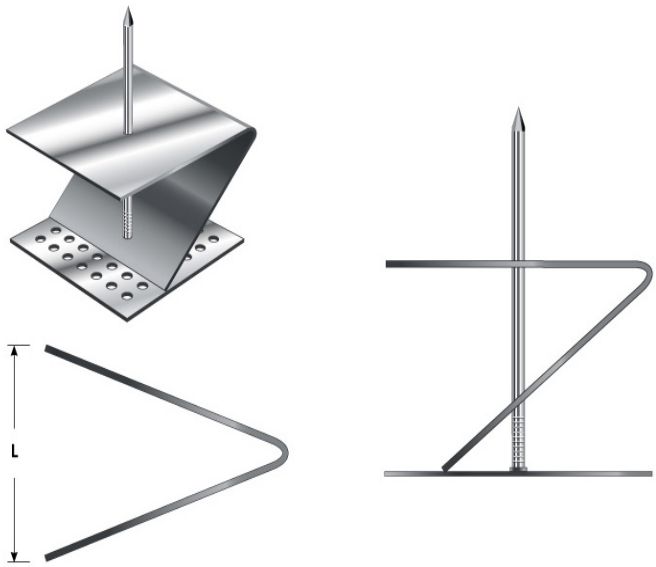

DESCRIPTION

Clutch Clips are used when an air space is required behind the insulation.The clutch clip is dropped over the installed 5 lb hanger. Insulation is impaled over the neail and secured with self-locking washer.

Available in 1” or 2”
Material: galvanized steel

Downey, CA
9459 Washburn Rd
Downey CA 90242
Ph: 800-252-1919
Fax: 562-862-3022

Hayward, CA
2391 American Ave
Hayward, CA 94545
Ph: 510-782-7883
Fax: 510-782-7918

Kent, WA
7820 S. 210th St #C103
Kent, WA 8032
Ph: 425-656-9787
Fax: 425-656-9786

Phoenix, AZ
3535 E Wier Ave #4
Phoenix, AZ 85040
Ph: 602-305-9350
Fax: 602-305-4890

PRONGED INSULATION HANGERS

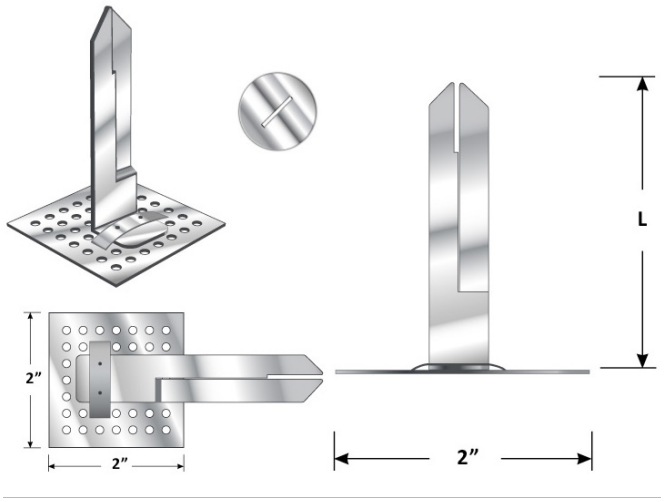

DESCRIPTION

This specialty type perforated hanger is used to secure insulation. After the insulation is impaled over the prongs, a slotted washer is installed. AGM TACTOO adhesive is used to install the plates.

	PRONG INSULATION HANGERS
LENGTH	2-3/4", for use up to 2" insulation 4-3/4", for use up to 4" insulation
MATERIAL	Galvanized steel perforated plate Galvanized steel prongs
PACKAGING	500 pcs/carton

Downey, CA
9459 Washburn Rd
Downey CA 90242
Ph: 800-252-1919
Fax: 562-862-3022

Hayward, CA
2391 American Ave
Hayward, CA 94545
Ph: 510-782-7883
Fax: 510-782-7918

Renton, WA
927 Thomas Ave SW
Renton, WA 98057
Ph: 425-656-9787
Fax: 425-656-9786

Phoenix, AZ
3535 E Wier Ave #4
Phoenix, AZ 85040
Ph: 602-305-9350
Fax: 602-305-4890

ANNULAR NAVY HANGER

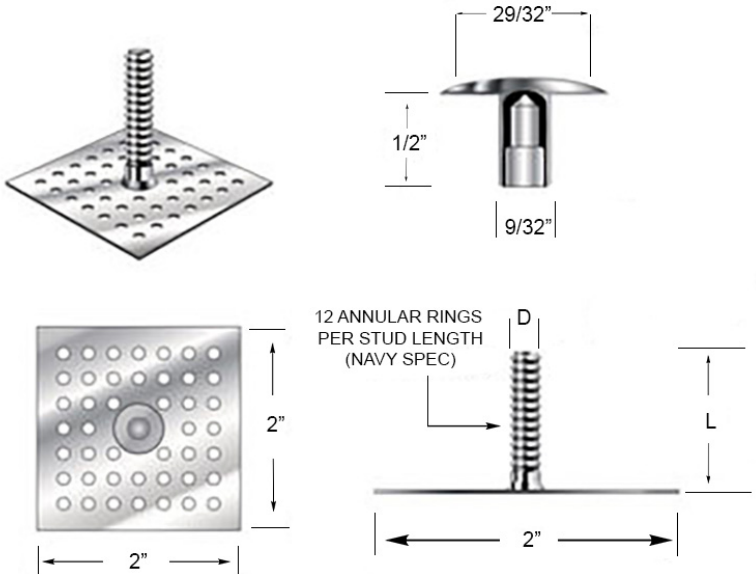

DESCRIPTION

Annular hangers are secured with adhesive specially formulated to bond to metal, monsonry and other sound substrates. Surfaces must be clean and dry before adhesive is applied. Some protective coatings are not compatible with adhesives and it is recommended that the user make test bonds before proceeding with the application.

SPECIFICATIONS

DIAMETER (D)	PLATE	LENGTH (L)
.176/.186	2" square	7/8"
.176/.186	2" square	1-7/8"
.176/.186	2" square	2-7/8"
.176/.186	2" square	3-7/8"
Available in longer lengths as special order Material: Steel and Aluminum		

Downey, CA
9459 Washburn Rd
Downey CA 90242
Ph: 800-252-1919
Fax: 562-862-3022

Hayward, CA
2391 American Ave
Hayward, CA 94545
Ph: 510-782-7883
Fax: 510-782-7918

Kent, WA
7820 S. 210th St #C103
Kent, WA 8032
Ph: 425-656-9787
Fax: 425-656-9786

Phoenix, AZ
3535 E Wier Ave #4
Phoenix, AZ 85040
Ph: 602-305-9350
Fax: 602-305-4890

Z-CLIP

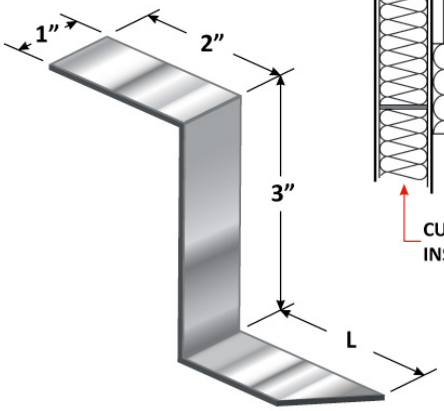

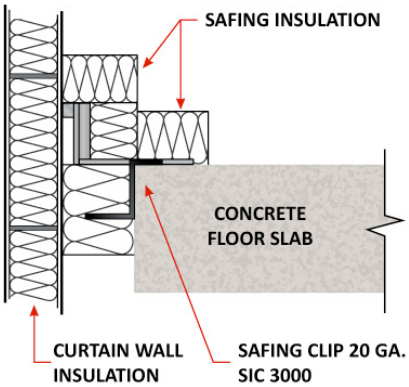

DESCRIPTION

This support bracket is used for installing fire and sound barrier insulation material between floors of multi-story buildings. This is a non-weldable fastener

PART NO	MATERIAL	LENGTH (L)	PCS / CARTON
SIC 2000	STEEL	2”	500
SIC 3000	STEEL	3”	500* standard

Downey, CA
9459 Washburn Rd
Downey CA 90242
Ph: 800-252-1919
Fax: 562-862-3022

Hayward, CA
2391 American Ave
Hayward, CA 94545
Ph: 510-782-7883
Fax: 510-782-7918

Renton, WA
927 Thomas Ave SW
Renton, WA 98057
Ph: 425-656-9787
Fax: 425-656-9786

Phoenix, AZ
3535 E Wier Ave #4
Phoenix, AZ 85040
Ph: 602-305-9350
Fax: 602-305-4890

HA19-Z ADHESIVE

California Compliant

VOC=0.0 lbs/gal or Zero (0) grams/liter

DESCRIPTION

HA19-Z Insulation Hanger Adhesive is a construction type adhesive specially designed for bonding AGM Insulation Hangers to metal, concrete and unfinished masonry surfaces. HA19-Z Insulation Hanger Adhesive dries to a tough yet resilient bond that withstands thermal cycling and shock.

HA19-Z Insulation Hanger Adhesive has been specially formulated to meet strict VOC requirements.

APPLICATION

This product is for industrial use only. It should be applied by trained and qualified craftspeople. Be sure surfaces are clean, dry and oil free. Apply approx. 1 1/16" (1.6MM) thick coat of HA19-Z Insulation Hanger Adhesive to the base of the hanger with a spatula, putty knife, small trowel, brush or caulking gun. Immediately press the hanger into place with a twisting motion. Make sure good contact is made. Always prepare and bond only one hanger at a time. Allow a minimum of 48 hours drying time before applying the insulation.

HA19-Z ADHESIVE DATA SHEET

HA19-Z
Insulation Hanger Adhesive

COLOR
Tan

SERVICE TEMPERATURE
-20°F TO 225°F
(-29°C TO 106°C)

COVERAGE
Approx. 800-1000 2”x 2” hangers per gallon

BONDING TIME
0 To 4 Minutes

WEIGHT PER GALLON
9.33 lbs./gal.

AVERAGE NONVOLATILE
53.75 % by weight

DRYING TIME
For best results allow a minimum of 48 hours before applying the insulation.

SAFETY
Flammable when wet.
Flash Point 8.6°F < (-13°C)
Red Label
THRESHOLD LIMIT VALUE OF SOLVENT VAPOR
(TLV): 200 ppm

LIMITATIONS
Do not apply below 40°F (4°C)
Some plastic foams may be attacked by the solvent in this product. Test before using.
HA19-Z Insulation Hanger Adhesive should not be used on wood surfaces or on painted or coated surfaces.

WARNING
CAUTION: FLAMMABLE MIXTURE RED LABEL.
Do not use or store near sparks, heat or open flame. Keep container closed when not in use. Use with adequate ventilation. Avoid prolonged or repeated breathing of vapor or contact with skin. Do not take internally. In an emergency, call a physician. Keep out of reach of children.

CLEANUP –Mineral spirits or toluol.

DESCRIPTION
HA19-Z Insulation Hanger Adhesive is a soft creamy construction type paste adhesive specially designed for bonding insulation hangers to metal ducts, and unfinished masonry surfaces. **HA19-Z Insulation Hanger Adhesive** dries to a tough, yet resilient bond that withstands thermal cycling and shock.

HA19-Z Insulation Hanger Adhesive has been specially formulated to meet strict VOC requirements.

APPLICATION
This product is for industrial use only. It should be applied by trained and qualified craftspeople. Be sure surfaces are clean, dry and oil free. Apply approx. 1 1/16” (1.6MM) thick coat of **HA19-Z Insulation Hanger Adhesive** to the base of the hanger with a spatula, putty knife, small trowel, brush or caulking gun. Immediately press the hanger into place with a twisting motion. Make sure good contact is made. Always prepare and bond only one hanger at a time.
Allow a minimum of 48 hours drying time before applying the insulation.

SPECIFICATION COMPLIANCE

ASTM E84
Standard Test Method For Surface Burning Characteristics of Building Materials (ANSI 2.5, NFPA 255,
UBC 8-1, UL 723)

Applied to Inorganic Reinforced Cement Board

Flame Spread	0
Smoke Developed	0

Adhesive applied in approximate 2 inch x 2 inch squares every 12 inches on center.

VOC= 0.0 lbs./gal or Zero (0) grams/liter

ASBESTOS FREE

MANUFACTURED BY MON-ECO INDUSTRIES, INC.
FOR AGM INDUSTRIES, INC.

WARRANTY TERMS: The physical and chemical properties of this product are representative of the typical average values derived in accordance with test methods deemed acceptable and can vary when subjected to normal manufacturing methods. These values are supplied only as a technical service and are subject to change without notice. To be sure information is current call AGM Industries, Inc.
Terms of Warranty: Warrantor, AGM Industries, Inc. warrants satisfactory results of this product only when recommendations herein established are followed. The recommendations for use are established upon tests and information deemed reliable. We recommend that adequate testing be made by the user to determine if the product is suitable for the intended purpose and use. Warrantor assumes no responsibility beyond replacement or refund of the purchase price of this product, since warrantor has no control over the methods and application of its product, methods and conditions of transportation, handling and storage of the product. WARRANTOR EXPLICITLY DISCLAIMS ALL LIABILITY FOR INCIDENTAL OR CONSEQUENTIAL DAMAGE. No agent or representative of AGM Industries, Inc. has the authority to change or extend these conditions.

TACTOO® GPA-72 ADHESIVE

DESCRIPTION

GPA-72 Tactoo® Adhesive is a high strength, heavy-bodied, thermoplastic rubber adhesive, formulated for adhering anchors for hanging insulation. It bonds metal and nylon anchors to metal, concrete or masonry surfaces. GPA-72 Tactoo® Adhesive can be used to install metal or ceramic wall fixtures in tile applications. It is also recommended for use as a general-purpose construction adhesive in applications requiring a high strength bond, or in applications subjected to high temperatures.

Features:
- Excellent thermal shock resistance
- High bond strength
- Water resistant
- Immediate grab
- Mildew resistant
- Non-slip formula

KEEP OUT OF REACH OF CHILDREN
FOR PROFESSIONAL OR INDUSTRIAL USE ONLY
NOT AVAILABLE FOR SELL IN CALIFORNIA

DIRECTIONS FOR USE

Use only after careful consideration of the warnings, directions and first aid instructions given. Use only adequate ventilation: Do not breathe dust, vapors or spray mist. Prevent static build-up. Properly bond and ground all containers and components. Vapors may ignite explosively. Keep away from heat, sparks and flame. Do not smoke. Extinguish all flames and pilot lights, and turn off stoves, heaters, electric motors, and other sources of ignition during use and until all vapors are gone.

TACTOO® GPA-72 ADHESIVE DATA

Surface preparation:
Surfaces to be bonded should be clean, dry and free of any oil, grease, frost or any other foreign matter which will impair adhesive. Do not use over painted surfaces. Clean all metal surfaces with methylene chloride, acetone or other degreaser, exercising safe practices as recommended by the manufacturer. Some protective coatings are not compatible with GPA-72 Tactoo® Adhesive. Make a test bond before proceeding with application.

Adhesive preparation:
GPA-72 Tactoo® Adhesive should be stored at room temperature (60° F to 80°F) for at least 24 hours prior to use.

Working temperature:
For best results, adhesive and materials to be bonded should be 30° F to 120°F.

Application:
Prepare and install one anchor at a time. Apply a dab (the size of a small walnut) of GPA-72 Tactoo® Adhesive to the anchor base with a putty knife and immediately (maximum open time is 15 minutes) press anchor firmly into place, with a slight twisting motion. For proper adhesion, insure that the film of adhesive covering the anchor base (after the anchor has been firmly pressed into place) is approximately 1/16" thick and protruding through the perforated base plate. Application will be 95% dry after 48-72 hours at 75ºF and 50% relative humidity. Do not apply load until application is completely dry.

Installing metal or ceramix wall fixtures or tile:
Butter the back with GPA-72 Tactoo® Adhesive and immediately press in place with a slight twisting motion. Allow to dry 24-72 hours before subjecting to use.

Installing GPA-72 TACTOO Adhesive to concrete:
New concrete surfaces need to cure a minimum of 28 days in order to ensure best adhesion. All concrete surfaces should be higher-pressure water- or sand-blasted to remove any surface curing agents and all foreign matter. Spread GPA-72 Tactoo® Adhesive allowing solvent to flash off for several minutes before pressing anchor firmly into place. Do not apply load until application is completely dry.

Drying:
Applications will be 95% dry after 48-72 hours, at 75ºF and 50% relative humidity. Heat and humidity, or cold weather can cause longer drying times.

Clean up:
Mineral spirits, exercising safe practices.

Storage:
Replace lid after each use and secure tightly for storage. Store out of direct sunlight in a cool, well-ventilated area. Avoid storing container directly on the floor or against an outside wall.

Formaldehyde: No urea formaldehyde added during adhesive manufacturing

Warning:
This product contains silica quartz, a chemical known to the State of California to cause cancer. This product contains Toluene a chemical known to the State of California to cause birth defects or other reproductive harm.

BASE	**Synthetic Polymer**	**WEIGHT/GALLON**	**8.92 lbs/gallon**
SOLVENT	**Organic Solvent**	**VOC CONTENT**	**404.5 g/l (EPA method 24)**
SHELF LIFE	**12 months, unopened**	**VISCOSITY**	**275,000-312,000 cps**
SOLIDS	**63.0 +/- 3.0%**	**OPEN TIME**	**15 minutes**
FLASHPOINT	**-9.4°F (-23°C)**	**DRY TIME**	**48-72 hours**

Downey, CA
9459 Washburn Rd
Downey CA 90242
Ph: 800-252-1919
Fax: 562-862-3022

Hayward, CA
2391 American Ave
Hayward, CA 94545
Ph: 510-782-7883
Fax: 510-782-7918

Renton, WA
927 Thomas Ave SW
Renton, WA 98057
Ph: 425-656-9787
Fax: 425-656-9786

Phoenix, AZ
3535 E Wier Ave #4
Phoenix, AZ 85040
Ph: 602-305-9350
Fax: 602-305-4890

Made in USA

LACING ANCHOR APPLICATION

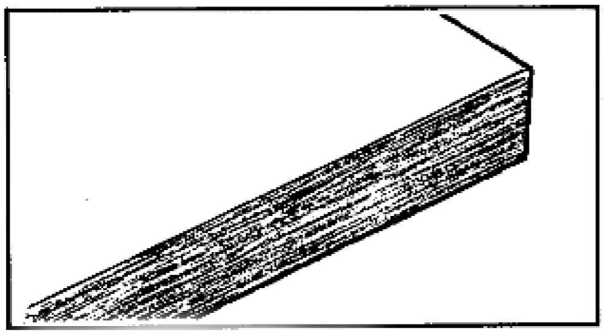

1.Prepare insulation blanket

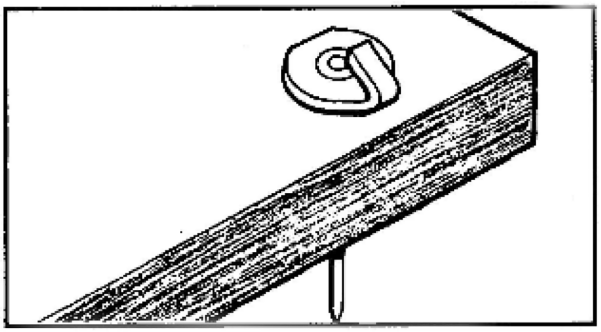

2.Press lacing-anchor through blanket

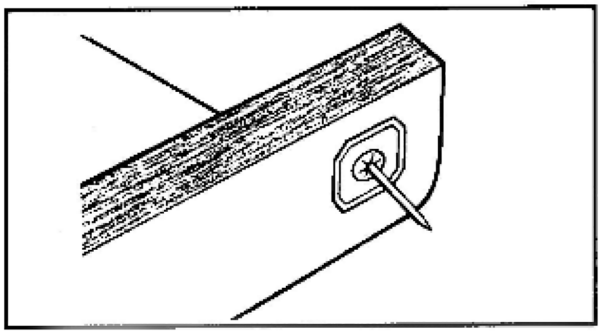

3.Secure lacing-anchor with self locking washer

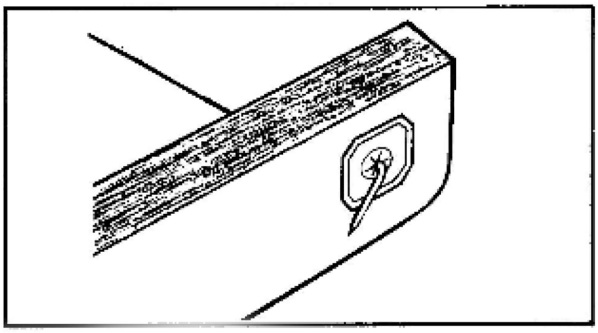

4.bend on clip-pff spindle

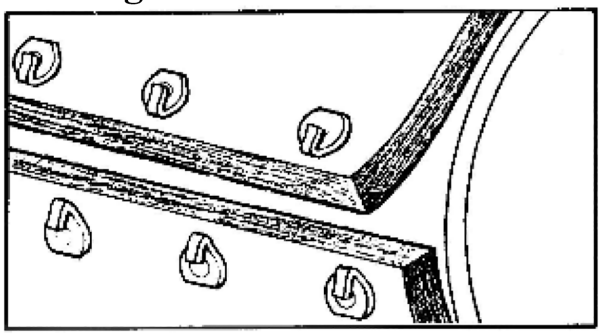

5. Apply insulation blanket

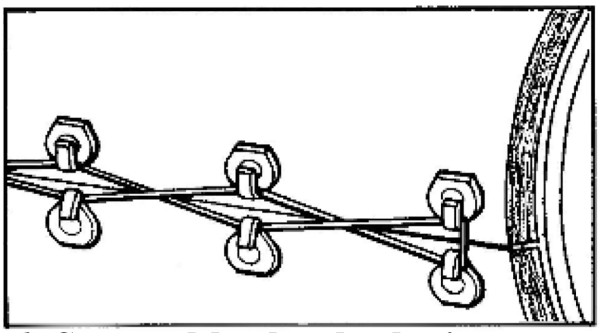

6. Secure blanket by lacing through hooks with lacing wire

Downey, CA
9459 Washburn Rd
Downey CA 90242
Ph: 800-252-1919
Fax: 562-862-3022

Hayward, CA
2391 American Ave
Hayward, CA 94545
Ph: 510-782-7883
Fax: 510-782-7918

Renton, WA
927 Thomas Ave SW
Renton, WA 98057
Ph: 425-656-9787
Fax: 425-656-9786

Phoenix, AZ
3535 E Wier Ave #4
Phoenix, AZ 85040
Ph: 602-305-9350
Fax: 602-305-4890

Made in USA

LACING ANCHORS

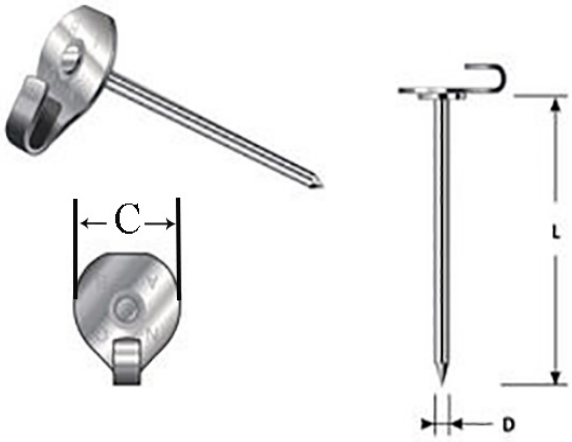

DESCRIPTION

Nails on the stainless steel lacing anchor are annealed as standard part of manufacturing. This makes it a quality product, surpassing others on the market. Stamped NOAB= non-asbestos material.
Material: Mild Steel & Stainless Steel (head is 304SS & spindle is 302SS)

Lacing Anchors are used in the fabrication of insulation blankets or removable covers/pads. The nail is pressed through the insulation material, so the hook portion sits on the top edge and the nail is secured on the opposite side of the insulation with a washer. The two sides of the blanket can then be "laced" together by the hooks with tie wire.

D	C	L
14 GA (.080)	7/8"	2-1/2"
14 GA (.080)	7/8"	4-1/2"
12 GA (.106)	7/8"	2-1/2"
12 GA (.106)	7/8"	4-1/2"

Standard lengths listed-others available upon request

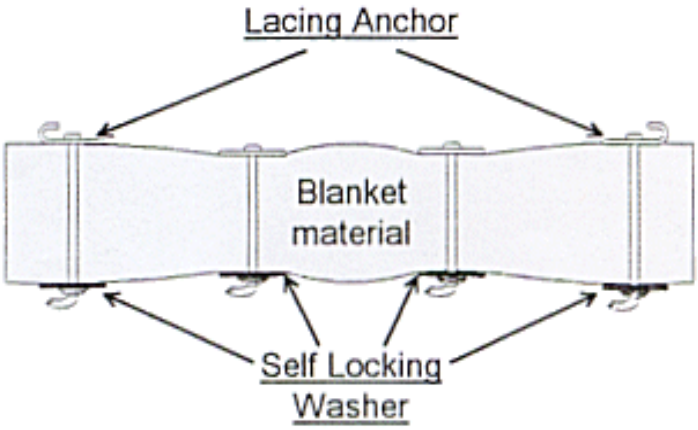

Also Available

Square Washers

Round Washers

Dome Caps

LACING ANCHOR PARTS

LACING HOOKS

Lacing hooks are used for securing and tying removable/reuseable insulation blankets or pads. Standard comes with two 3/16” diameter holes, 1/2” apart. Also available with one hole (lacing anchor top)

Material: Stainless Steel 304
Diameter: 7/8”

2 HOLE LACING HOOK

1 HOLE LACING HOOK

LACING RINGS

Lacing rings are used with lacing wire in the fabrication of insulation blankets and removable covers/pads.

Material: Zinc Die Cast or Stainless Steel
Diameter: .680” (outsie) .500”(inside)

LACING WASHERS

Lacing washers are used with wire to fabricate insulation blankets and removable or reuseable covers. Washers have two 5/32” diameter holes, 1/2” apart.

Material: Stainless Steel 301 or Aluminum 5052-H38
Head Diameter: 1” or 1-3/16”

Downey, CA
9459 Washburn Rd
Downey CA 90242
Ph: 800-252-1919
Fax: 562-862-3022

Hayward, CA
2391 American Ave
Hayward, CA 94545
Ph: 510-782-7883
Fax: 510-782-7918

Kent, WA
7820 S. 210th St #C103
Kent, WA 8032
Ph: 425-656-9787
Fax: 425-656-9786

Phoenix, AZ
3535 E Wier Ave #4
Phoenix, AZ 85040
Ph: 602-305-9350
Fax: 602-305-4890

QUILTING PINS

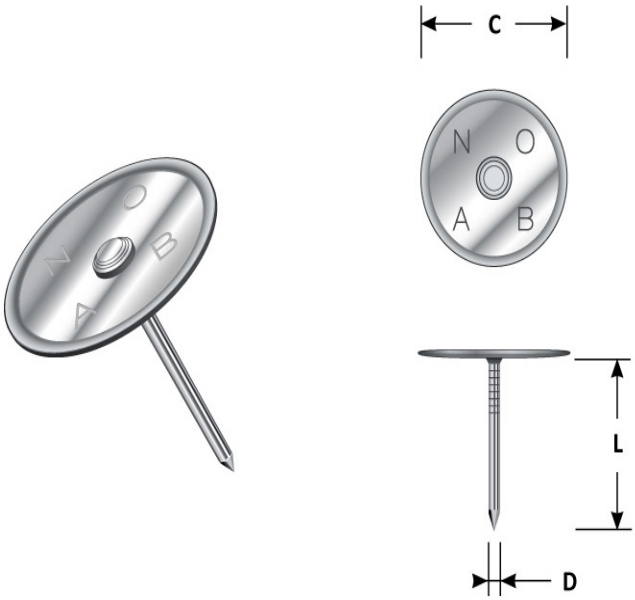

DESCRIPTION

This fastener is used to provide support (quilting) of the insulation material in a blanket or removable pad. Quilting Pins are normally used, in addition to Lacing Anchors, to fabricate blankets and are secured with a self-locking washer.

SPECIFICATIONS

D	C	L
14 GA (.080)	7/8”	2-1/2”
14 GA (.080)	7/8”	4-1/2”
12 GA (.106)	7/8”	2-1/2”
12 GA (.106)	7/8”	4-1/2”

Material: Stainless Steel
Standard lengths listed, other lengths availale on request

Downey, CA
9459 Washburn Rd
Downey CA 90242
Ph: 800-252-1919
Fax: 562-862-3022

Hayward, CA
2391 American Ave
Hayward, CA 94545
Ph: 510-782-7883
Fax: 510-782-7918

Kent, WA
7820 S. 210th St #C103
Kent, WA 8032
Ph: 425-656-9787
Fax: 425-656-9786

Phoenix, AZ
3535 E Wier Ave #4
Phoenix, AZ 85040
Ph: 602-305-9350
Fax: 602-305-4890

ANNULAR RING NAVY STUD

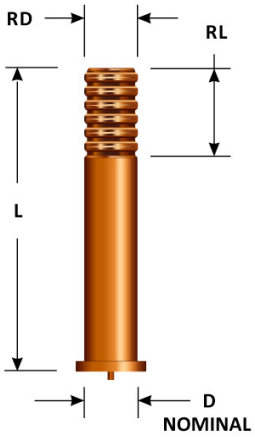

DESCRIPTION

Annular Ring Navy Studs are available in both low carbon steel and aluminum. All studs conform to military specificatioons as outlined in MIL-S-24149 covering weld studs for Capacitor Discharge (CD) Welding. Can be secured with navy mushroom cap.

SPECIFICATIONS

PART NO	MATERIAL	L	D	WGT/M
NS-0875	MILD STEEL	7/8”	.175/.180	6.4
NS-1875	MILD STEEL	1-7/8”	.175/.180	12.9
NS-2875	MILD STEEL	2-7/8”	.175/.180	20
NS-3875	MILD STEEL	3-7/8”	.175/.180	28.2
ALNS-0875	ALUMINUM	7/8”	.175/.180	2.2
ALNS-1875	ALUMINUM	1-7/8”	.175/.180	4.7
ALNS-2875	ALUMINUM	2-7/8”	.175/.180	7.5
ALNS-3875	ALUMINUM	3-7/8”	.175/.180	9.9

Special lengths are available upon request
All steel studs are cooper plated, stainless steel available as a special item

Downey, CA
9459 Washburn Rd
Downey CA 90242
Ph: 800-252-1919
Fax: 562-862-3022

Hayward, CA
2391 American Ave
Hayward, CA 94545
Ph: 510-782-7883
Fax: 510-782-7918

Kent, WA
7820 S. 210th St #C103
Kent, WA 8032
Ph: 425-656-9787
Fax: 425-656-9786

Phoenix, AZ
3535 E Wier Ave #4
Phoenix, AZ 85040
Ph: 602-305-9350
Fax: 602-305-4890

MUSHROOM CAPS

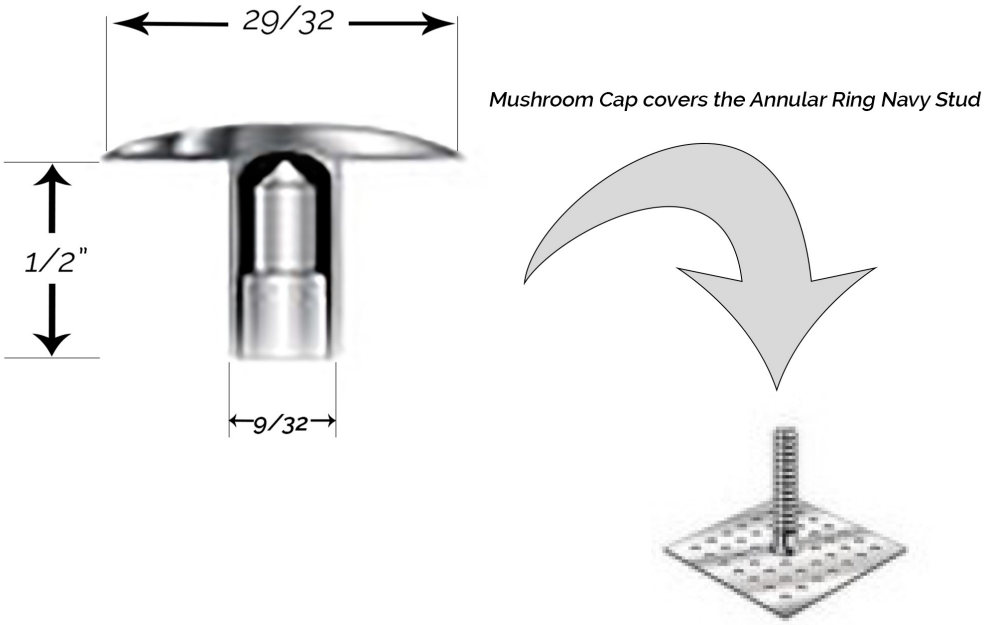

DESCRIPTION

Mushroom caps, also known as Navy caps are used with Annular Ring Navy Studs. Normally used for insulating boats/ship hulls and is covered by a Military Spec. A special Mushroom style Drive-On cap is used with these hangers, to secure the insulation.

Size: 3/16” dia

Material: Aluminum

Downey, CA
9459 Washburn Rd
Downey CA 90242
Ph: 800-252-1919
Fax: 562-862-3022

Hayward, CA
2391 American Ave
Hayward, CA 94545
Ph: 510-782-7883
Fax: 510-782-7918

Renton, WA
927 Thomas Ave SW
Renton, WA 98057
Ph: 425-656-9787
Fax: 425-656-9786

Phoenix, AZ
3535 E Wier Ave #4
Phoenix, AZ 85040
Ph: 602-305-9350
Fax: 602-305-4890

HOG RING- 3/4”

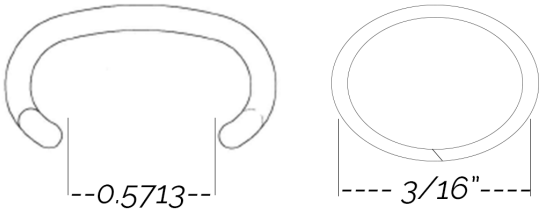

DESCRIPTION

The 3/4” hog ring is a very popular hog ring that is used in a vast range of industries. It is manufactured out of a variety of high quality alloy wires and then taped together with high strength polyester tape. It features blunt tips to promote safety or sharp tips when piercing is required in the application.

SPECIFICATIONS

DIMENSIONS	Open: 1/2” crown (0.050”/1.27mm) Closed: 1/8” dia (0.125”/3.175mm) Wire: 16 gauge (0.0625”/1.60mm)
ARTICLE CODE	P970038
APPLICATION TOOL	SC760 / SC761 (pneumatic)
RING DESIGN	C Style
MATERIAL OPTIONS	Galvanizes, Aluminum, Stainless
POINTS	Blunt or Sharp
FASTNERS PER STRIP	110 rings
FASTENRS PER BOX	11,000 rings
WEIGHT PER BOX	14.5 lbs
BOXES PER SKID	100 boxes
WEIGHT PER SKID	1,450 lbs

Downey, CA
9459 Washburn Rd
Downey CA 90242
Ph: 800-252-1919
Fax: 562-862-3022

Hayward, CA
2391 American Ave
Hayward, CA 94545
Ph: 510-782-7883
Fax: 510-782-7918

Kent, WA
7820 S. 210th St #C103
Kent, WA 8032
Ph: 425-656-9787
Fax: 425-656-9786

Phoenix, AZ
3535 E Wier Ave #4
Phoenix, AZ 85040
Ph: 602-305-9350
Fax: 602-305-4890

PNEUMATIC HOG RING TOOL

DESCRIPTION

The HC716 hog ring tool takes KHF 16110 series hog rings available in materials from bright, galvanized and stainless. The relatively low air consumption allows for use with standard compressors. The tool is designed for long service life and easy maintenance through carefull engineering. Benefits of using this tool can be seen immediately in less man hours on the job, lower occurances of installer injuries and lower per connection prices. Size: 12.75” x 8.66” x 3.66” Weight: 3lbs

Applications: Automotive Seating, Commercial Fence Installation, Bag Closure, Oil Absorption Socks, Crafts, Erosion Control, Construction, Bedding

HC716 LONG MAGAZINE	
ARTICLE CODE	HRT960009
MAGAZINE TYPE	Rear loading
STAPLE TYPE	16110 Series
MAGAZINE CAPACITY	110
FASTENERS PER STRIP	1 x 110
OPERTAING PRESSURE	95 psi
AIR CONSUMPTIN/OPERATION	100 psi
INNER HOSE DA. REQ	3/8”
EMISSION SOUND LEVEL	d=82 dB

Downey, CA
9459 Washburn Rd
Downey CA 90242
Ph: 800-252-1919
Fax: 562-862-3022

Hayward, CA
2391 American Ave
Hayward, CA 94545
Ph: 510-782-7883
Fax: 510-782-7918

Kent, WA
7820 S. 210th St #C103
Kent, WA 8032
Ph: 425-656-9787
Fax: 425-656-9786

Phoenix, AZ
3535 E Wier Ave #4
Phoenix, AZ 85040
Ph: 602-305-9350
Fax: 602-305-4890

STUD WELDING PRODUCTS, INC

Capacitor Discharge (CD) Pin Welders

for cuphead, mini cup, weld pins, and weld studs

FEATURES	StudPro LiteXi	Sure Shot II	StudPro 2500XiP	Pegasar 500 ISO
DESCRIPTION	Light weight at only 10lbs. Rugged welder that is easy to use.	Versatile, high powered welder easy to handle and compact.	Touchscreen interface with preset values. Our most popular CD welder.	Battery powered or 110 vac unit, easy to use with quick recharging times.
WELD RANGE	Weld Pins = Up to 10ga Cuphead/Mini Pins **CD Studs = Up to #10**	Weld Pins = Up to 10ga Cuphead/Mini Pins **CD Studs = Up to 5/16”**	Weld Pins = Up to 10ga Cuphead/Mini Pins **CD Studs = Up to 1/4”**	Weld Pins = Up to 10ga Cuphead/Mini Pins **CD Studs = Up to 1/4”**
DUTY CYCLE	15-30 studs/minute max	24 studs/minute max	18 studs/per minute (1/4” settings)	20 studs/minute (1/4” setting)
CAPACITANCE	100,000 µF	100,000 µF	76,000 µF	100,000 µF
PRIMARY POWER	85-250 VAC 50/60Hz 10A Fast Acting Fuse	110/220VAC 50/50Hz 15/7.5 AMP	110 VAC @ 50/60 HZ 15 AMP 220 VAC @50/60 HZ 7.5 AMP	100V TO 240V, 50/60 Hz In **Battery operation**: 25.55V
CHARGE VOLTAGE	35-100 V	35 - 160 V	32-200 V	50 to 100 V (stepless voltage regulation)
SIZE	12”L X 6”W X 10”H	11”L X 13”W X 6”H	14” L X 10”W X 11”H	18”L x 11”W x 14”H
POWER UNIT WEIGHT	10.2 lbs	18 lbs	18 lbs	26 lbs with Battery 24 lbs without Battery
CABLE LENGTH	25’	20’	25’	9.8’
GROUND CABLE LENGTH	15’	15’	15’	8.2’

Visit our website at www.StudWeldProd.com or email Info@StudWeldProd.com

STUD WELDING PRODUCTS, INC

Your Number One Stud

STUD WELDING UNIT
Model: StudPro LiteXi

Made in USA

New Screen Protector

FEATURES	STUDPRO LITEXI
WELD RANGE	Weld Pins = Up to 10ga CD Studs = Up to #10 Cup Head Pins
DUTY CYCLE	15-30 studs per minute
CAPACITANCE	100,000
WELD ENERGY	500 watt-second
PRIMARY POWER	85-250 VAC 1.5-5A 50/60Hz 10A Fast Acting Fuse
CHARGING VOLTAGE	35-100 VDC
SIZE	12.5”L X 10.1”W X 6.0”H
POWER UNIT WEIGHT	10.2 LBS
GUN CABLE LENGTH	#4 X 25’
GROUND CABLE LENGTH	#4 X 15’

FEATURES

- NEW FEATURE Intuitive Touchscreen Interface with Preset values for fast, accurate, and repeatable weld settings
- NEW FEATURE Screen Protector: provides protection for the tourchscreen interface.
- NEW FEATURE Set-Point Discharge: Unit discharges directly to a new set point without needing to discharge completely
- NEW FEATURE Universal Input Voltage: Plug and play, no need to re-tap the machine for 110V or 220V input voltages
- NEW FEATURE Low input voltage capability enables operation with long extension cords
- NEW FEATURE Contact and Trigger Indicators for fast troubleshooting of hand tool and weld cable maintenance issues
- NEW FEATURE Thermal and Voltage protection indicators to protect the unit from damage due to overheating or poor input power
- Increased airflow for improved efficiency and duty cycle
- Rigid internal construction eliminates the possibility of components coming loose during rough handling or operations

Visit our website at www.StudWeldProd.com or email Info@StudWeldProd.com

Downey, CA
9459 Washburn Rd
Downey CA 90242
Ph: 800-252-1919
Fax: 562-862-3022

Hayward, CA
2391 American Ave
Hayward, CA 94545
Ph: 510-782-7883
Fax: 510-782-7918

Renton, WA
927 Thomas Ave SW
Renton, WA 98057
Ph: 425-656-9787
Fax: 425-656-9786

Phoenix, AZ
3535 E Wier Ave #4
Phoenix, AZ 85040
Ph: 602-305-9350
Fax: 602-305-4890

STUD WELDING PRODUCTS, INC

Your Number One Stud

STUD WELDING UNIT
Model: StudPro 2500XIP

Made in USA

FEATURES	StudPro 2500XIP
WELD RANGE	14ga - 1/4" ; cup head pins
DUTY CYCLE	18 studs/per minute (1/4" settings)
CAPACITANCE	76,000
WELD ENERGY	1520 watts-second
PRIMARY POWER	110 VAC @ 50/60 HZ 15 AMP 220 VAC @50/60 HZ 7.5 AMP
CHARGE VOLTAGE	35-200 VDC
SIZE	14" L X 10.5"W X 11.5"H
POWER UNIT WEIGHT	18 LBS
GUN CABLE LENGTH	#4 x 25'
GROUND CABLE LENGTH	#4 x 15'

FEATURES

- NEW FEATURE Intuitive Touchscreen Interface with Preset values for fast, accurate, and repeatable weld settings
- NEW FEATURE Set-Point Discharge: Unit discharges directly to a new set point without needing to discharge completely
- NEW FEATURE Universal Input Voltage: Plug and play, no need to re-tap the machine for 110V or 220V input voltages
- NEW FEATURE Low input voltage capability enables operation with long extension cords
- NEW FEATURE Contact and Trigger Indicators for fast troubleshooting of hand tool and weld cable maintenance issues
- NEW FEATURE Thermal and Voltage protection indicators to protect the unit from damage due to overheating
- Rigid internal construction minimizes the possibility of components coming loose during rough handling or operations
- Sheet metal is powder-coated for greater durability, texture, and appearance.
- Hand tool has an adjustable internal spring to apply the correct spring pressure for every welding application
- Hand tool can be configured for "B" collets, "CI" collets, Euro collets, or standard tapered chucks.

Visit our website at www.StudWeldProd.com or email Info@StudWeldProd.com

Downey, CA
9459 Washburn Rd
Downey CA 90242
Ph: 800-252-1919
Fax: 562-862-3022

Hayward, CA
2391 American Ave
Hayward, CA 94545
Ph: 510-782-7883
Fax: 510-782-7918

Renton, WA
927 Thomas Ave SW
Renton, WA 98057
Ph: 425-656-9787
Fax: 425-656-9786

Phoenix, AZ
3535 E Wier Ave #4
Phoenix, AZ 85040
Ph: 602-305-9350
Fax: 602-305-4890

STUD WELDING PRODUCTS, INC

Your Number One Stud

Battery Powered

STUD WELDING UNIT
Model: PEGASAR 500 ISO

Powerfull & Lightweight

- Variable Power Supply (100-240V)
- Welding Range: #4-3/16"; Cup Head Pin
- Weight is only 26 lbs
- Inverter-Capacitor Charging Technology

DESCRIPTION

Battery/110 VAC Stud Welding Unit for CD stud welding (capacitor discharge welding) according to current standards. Easy to use with per-progarmmed settings. Light weight and portable makes this unit great for job sites. Inverter capacitor charging technology providing quick recharging times and increased duty cycle. Especially suitable for insulation and cupped head pins.

FEATURES	PEGASAR 500 ISO
WELD RANGE	Weld Pins - Up to 10 gauge, CD Studs - Up to 3/16" Cup Head Pins
WELD RATE	16-20 pins per minute
DIMENSIONS	18"L x 11"W x 14"H
WEIGHT	26 LBS with Battery 24 LBS without Battery
PRIMARY POWER	100V TO 240V, 50/60 Hz In battery operation: 25.55V

FEATURES

- Self-sufficient, no power connection required
- Weld Up to approx. 800 10ga weld pins & 1000 cupped head pins with a single battery charge
- Work without interruption with an optional spare battery
- Cable tidy system provided via the handle
- Enclosed housing (no air vents)
- Weld in environments with increased exposure to electrical hazards
- Quick access buttons for fast setup
- Accu 150 battery 88-23-484 & Accu Charger 88-23-661(Sold Separately)

Visit our website at www.StudWeldProd.com or email Info@StudWeldProd.com

Downey, CA
9459 Washburn Rd
Downey CA 90242
Ph: 800-252-1919
Fax: 562-862-3022

Hayward, CA
2391 American Ave
Hayward, CA 94545
Ph: 510-782-7883
Fax: 510-782-7918

Renton, WA
927 Thomas Ave SW
Renton, WA 98057
Ph: 425-656-9787
Fax: 425-656-9786

Phoenix, AZ
3535 E Wier Ave #4
Phoenix, AZ 85040
Ph: 602-305-9350
Fax: 602-305-4890

"B" COLLETS

STUD DIA	PART NO.
3 MM	CDB-003M
14 GA	CDB-008
12 GA & #4	CDB-010
1/8 GA & #5	CDB-012
10 GA & #6	CDB-013
4 MM	CDB-004M
#8	CDB-015
#10	CDB-018
5 MM	CDB-005M
6 MM	CDB-006M
.215	CDB-021
1/4	CDB-025
5/16	CDB-031
8 MM	CDB-008M
3/8	CDB-037
10 MM	CDB-010M

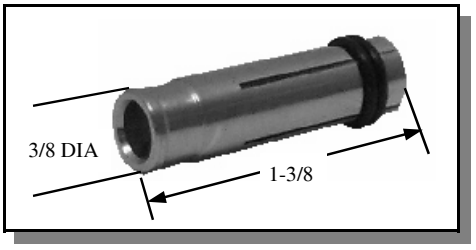

"B" COLLETS AGM STYLE

STUD DIA.	PART NO.
14 GA	CDB-008A
12 GA	CDB-010A
#6	CDB-013A
#8	CDB-015A
#10	CDB-018A
1/4	CDB-025A

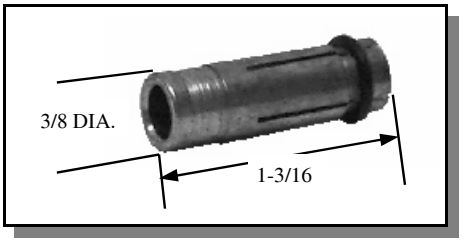

CAPACITOR DISCHARGE ACCESSORIES

ONE PIECE CONTACT/MAGNETIC CHUCK

PART NO.
039-613

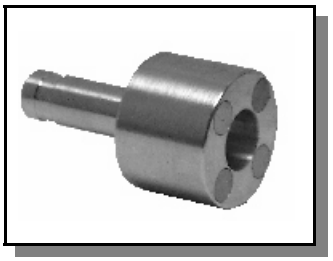

"B" COLLETS PROTECTOR

STUD SIZE	PART NO.
14 GA X 12 GA	028-837
10 GA	028-838
BODY ONLY	028-836
12 GA INSERT	028-834
10 GA INSERT	028-835

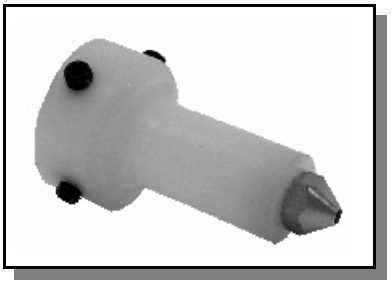

"B" STOP

STUD LENGTH	STOP LENGTH	PART NO.
1-3/8 (BUTTON STOP)	1/8	033-779
UNIVERSAL		033-780

SHORT BUTTON STOP

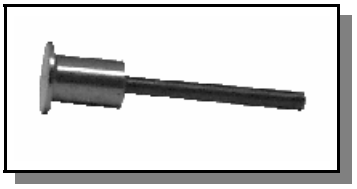

UNIVERSAL "B" STOP

COLLETS INSERTS FOR WELD PINS

STUD DIA. X DEPTH	PART NO.
12GA X 1/2	CIP-010-050
12GA X 3/4	CIP-010-075
12GA X 1”	CIP-010-100
10GA X 1/2	CIP-014-050
10GA X 3/4	CIP-014-075
10GA X 1”	CIP-014-100

STANDARD SPARK SHIELD

STUD RANGE	PART NO.
14 GA – #6	033-764
#8 – d3/8	033-765

VENTED SPARK SHIELD

STUD RANGE	PART NO.
14 GA – 10 GA	033-769
#6 – 3/8	033-769L

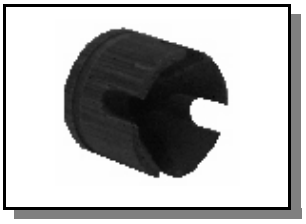

STUD WELDING LEGS

LENGTH	PART NO.
7"	L-03107
9"	L-03109
14"	L-03114
18"	L-03118

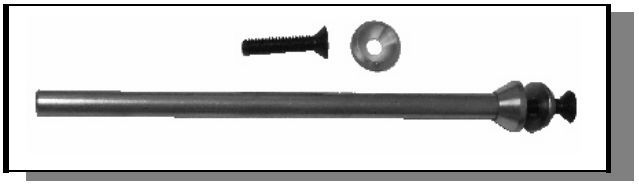

CD FOOT PIECE

PART NO.
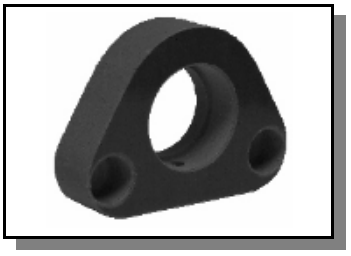
028-833